euro-block

product specification

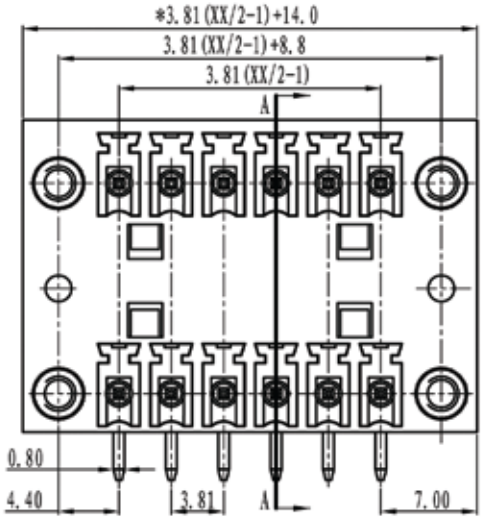

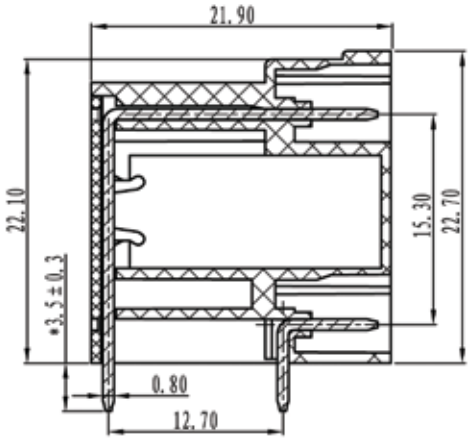

SECTION A-A

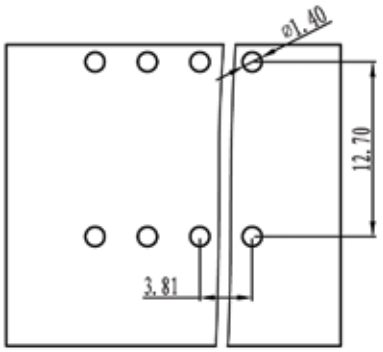

TOLERANCES EXCEPT AS NOTED

	linear dimension					fillet	chamfer		short angle sid								
variable range	to 6	over 6 to 30	over 30 to 120	over 120 to 480	over 480 to	all	to 6	over 6 to	to 10	over 10 to 50	over 50 to 120	over 120 to	all	to 5	over 5 to 30	over 30 to 120	over 120 to
tolerance	±0.1	±0.2	±0.3	±0.5	±0.9	±0.2	±0.5	±1	1°	30'	20'	10'	0.5	0.025	0.06	0.12	0.4

Electrical
Standard: UL-IEC
Rated voltage: 300V-250V
Rated current: 8A-7A
Contact resistance: 20m Ω
Withstanding voltage: AC2000V/1Min
Insulation resistance: 5000M Ω/DC1000V

Mechanical
Temp.Range: -40°C~+105°C
MAX Soldering: +250°C for 5 sec

Dimensions
Pitch: 3.81mm
Poles: 2p-24p

Material
Housing: PA66, UL94V-0
Pin header: Brass, Tin plated
Nut: M2.5, Brass

Schema generale del codice di ordinazione / General description of ordering code

serie	n°poli	passo	versione	colore	custom
MDL	02/24	3.81	HF		

UNITS	mm	SIZE	A4	SCALE		FIRST ANGLE PROJECTION
euro-block						NAME: MDL3.81-HF